TESSe2b
the smart energy storage

Thermal Energy Storage Systems

for energy efficient building an integrated solution for residential building energy storage by solar and geothermal resources

O projeto Europeu H2020 TESSe2b

Utilização de armazenamento de energia térmica através de utilização de PCMs em conjunto com energia solar e geotermia

16.as Jornadas de Climatização

Luís Coelho – Instituto Politécnico de Setúbal (IPS)

Objectivos

- Apresentar o projeto Europeu TESSe2b
- Dar a conhecer algumas das investigações já efetuadas na âmbito do projeto TESSe2b

Bombas de Calor Geotérmicas (GSHP):

- **Vantagens das GSHP (eficiência)**

- Temperatura da água:
  - **Estável** na maior parte do ano;
    (ex. Setúbal, 17-19 ºC);
  - Permite:
  - **Maior eficiência** no aquecimento e arrefecimento ambiente,
  - **Maior eficiência** na preparação de AQS.
- Outras vantagens: menores impactes visuais e de ruido, maior robustez.

- **Desvantagens das GSHP**

- Custos de instalação mais elevados
  - Furos geotérmicos: 35 - 45 euros/m

- **Ponto critico:**
- Estudo de viabilidade económico baseado numa análise energética detalhada:
  - Mais vantajoso em edifícios com ocupação prolongada como hotéis, hospitais, residenciais permanentes e em climas mais frios.

Experiencia do IPS em Projetos Europeus em Geotermia

TESSe2b - Thermal Energy Storage Systems for Energy Efficient Buildings. An integrated solution for residential building energy storage by solar and geothermal resources; H2020, EeB 6 – 2015, Starting data: 01/10/2015; Duration: 48 months, ***www.tesse2b.eu.*** (***Project Coordinator)***

GROUND-MED - Advanced ground source heat pump systems for heating and cooling in Mediterranean climate; FP7, final year 2014, www.groundmed.eu.

LOW-BIN - Efficient Low Temperature Geothermal Binary Power, FP6, final year 2009, www.lowbin.eu.

IGEIA - Integration Of Geothermal Energy Into Industrial Application, IEE, final year 2009, www.saunier-associes.com/igeia/index.

GROUND-REACH - Reaching the Kyoto targets by means of a wide introduction of ground coupled heat pumps (GCHP) in the built environment, IEE, final year 2008, http://groundreach.fiz-karlsruhe.de/.

GROUNDHIT - Ground Coupled Heat Pumps of High Technology, FP6, final year, 2009, www.groundhit.eu/

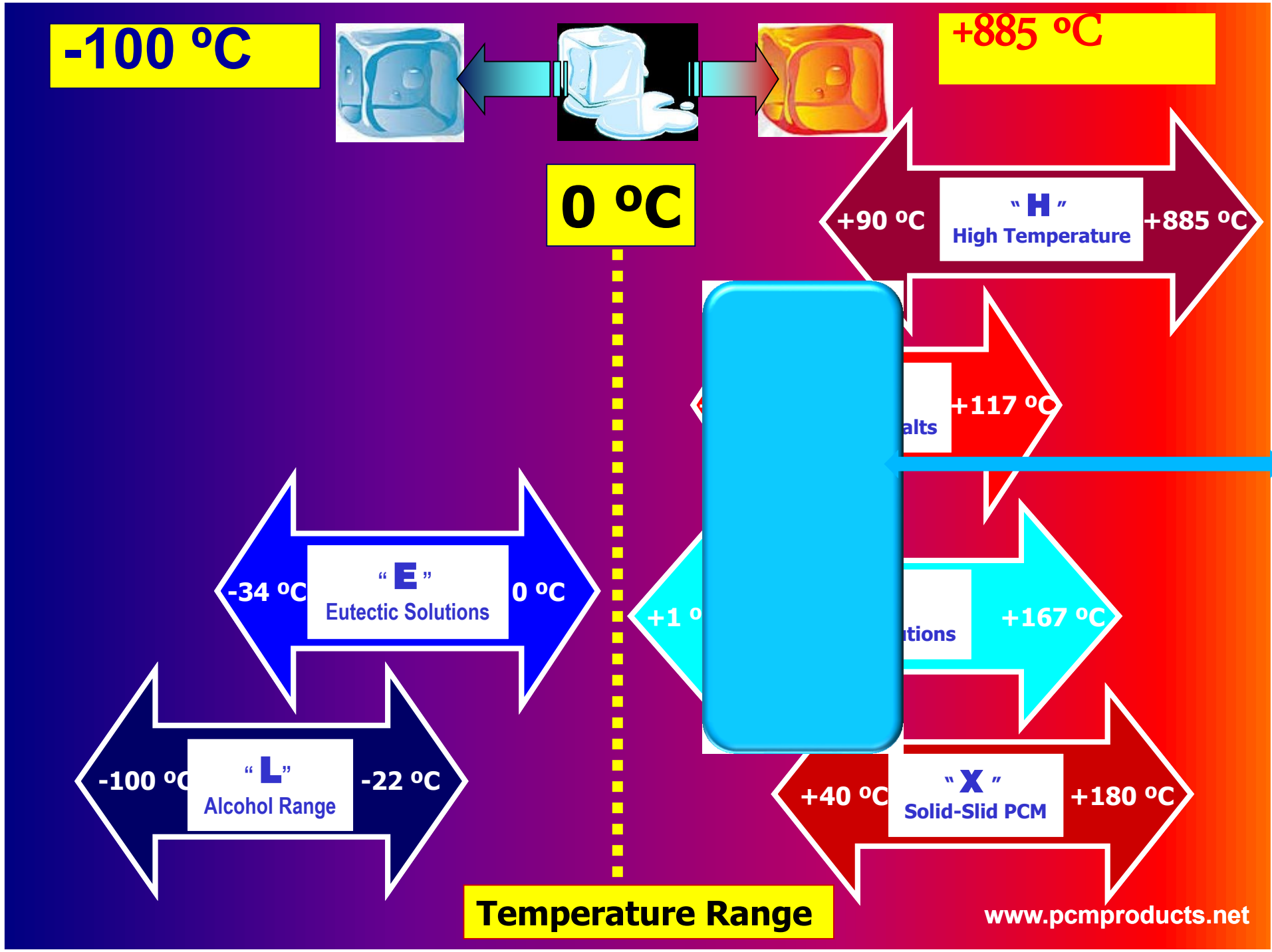
-100 ºC
+885 ºC
0 ºC
+90 ºC
" H "
High Temperature
+885 ºC
+117 ºC
7ºC - 60ºC
Parafinas
Sais Hidratados
-34 ºC
" E "
Eutectic Solutions
0 ºC
+167 ºC
-100 ºC
" L "
Alcohol Range
-22 ºC
+40 ºC
" X "
Solid-Slid PCM
+180 ºC
Temperature Range
www.pcmproducts.net

Project Title

Thermal Energy Storage Systems for Energy Efficient Buildings. An integrated solution for residential building energy storage by solar and geothermal resources

- TESSe2b Project –

Project number: 680555

Call identifier: H2020-EeB-2015 **Call for EeB – Energy-efficient Buildings**

EeB 6 – 2015: Integrated solutions of thermal energy storage for building applications

Context of the project

TESSe2b Project

Type of action: **RIA** - Research & Innovation Actions (defined in the call)

Activities expected to focus on Technology Readiness **Levels 4-6**.

- Budget: 4.311.700 euros;
- Number of participants: 10
- Number of countries: 8
- Starting date of the project: 01/10/2015;
- Duration: 48 months

G. Technology readiness levels (TRL)

Where a topic description refers to a TRL, the following definitions apply, unless otherwise specified:

- TRL 1 – basic principles observed
- TRL 2 – technology concept formulated
- TRL 3 – experimental proof of concept
- TRL 4 – technology validated in lab
- TRL 5 – technology validated in relevant environment (industrially relevant environment in the case of key enabling technologies)
- TRL 6 – technology demonstrated in relevant environment (industrially relevant environment in the case of key enabling technologies)
- TRL 7 – system prototype demonstration in operational environment
- TRL 8 – system complete and qualified
- TRL 9 – actual system proven in operational environment (competitive manufacturing in the case of key enabling technologies; or in space)

General Objectives

- Increasing **energy efficiency** in buildings, enhance **green technologies** and promote advance **thermal energy storage** solutions.

- The target of TESSe2b is to **design**, **develop**, **validate** and **demonstrate** a **modular** and **low cost thermal storage** technology based on **solar collectors** and highly efficient **heat pumps** for **heating**, **cooling** and domestic hot water (**DHW**) production.

General Objectives

Latent Thermal Energy Storage

Heating and Cooling Tanks (NEPCM)

Enhanced PCM BHEs

Renewable Energy Sources

Solar (Thermal Panels)
Heating and DHW

Geothermal - GSHP
Cooling, Heating and DHW

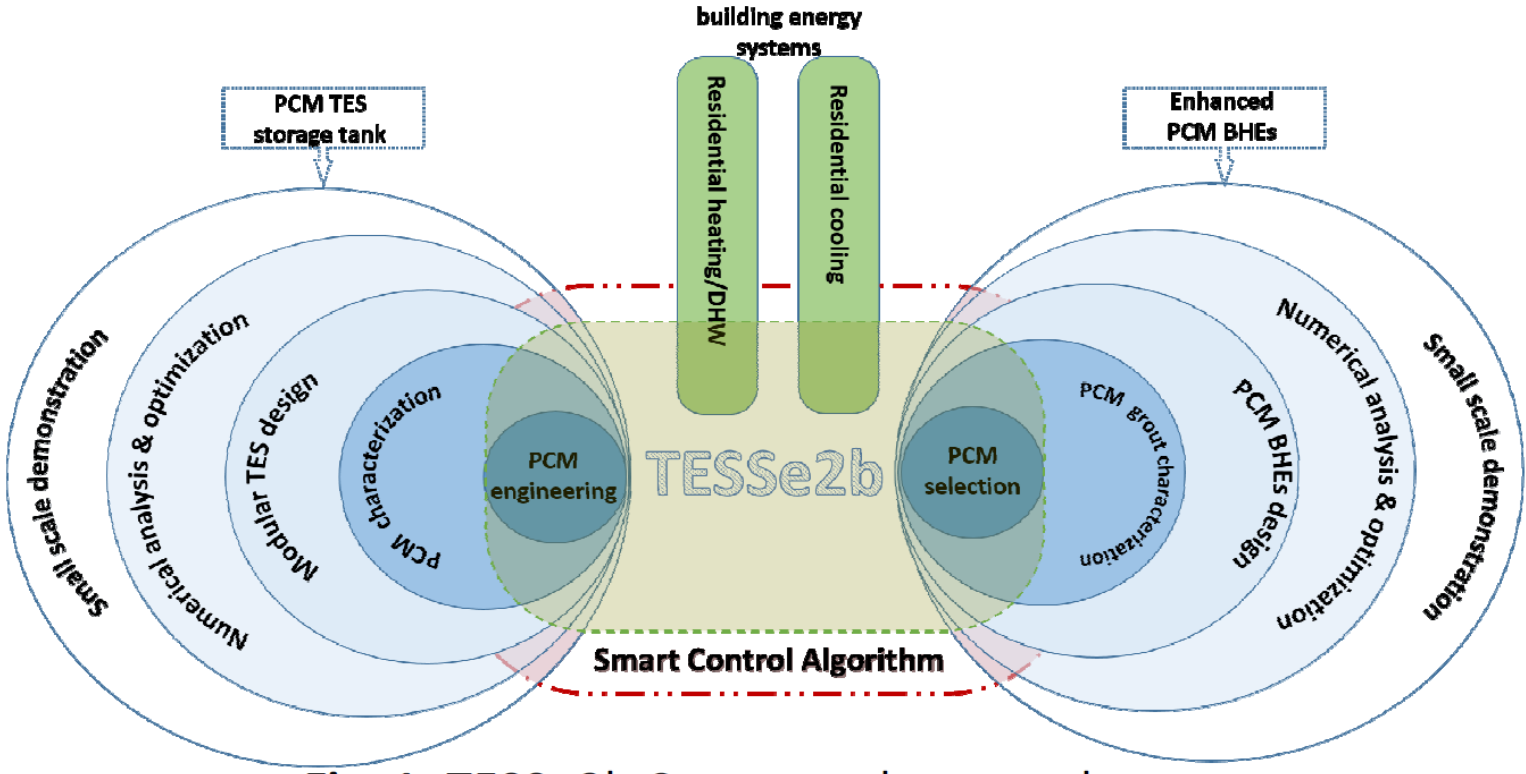

Fig. 1: TESSe2b Conceptual approach.

Expected results

- The TESSe2b solution will **reduce the building energy consumption at least 15%** could be reached **25-30%,** with a corresponding reduction in operating costs.

- The estimated **payback** period is expected to reach **8-9 years**.

- TESSe2b project and its exploitable products have the **potential** not only to be included as a **market opportunity** but also to **enhance the development of TES systems** in the EU market.

Consortium overview and organisation

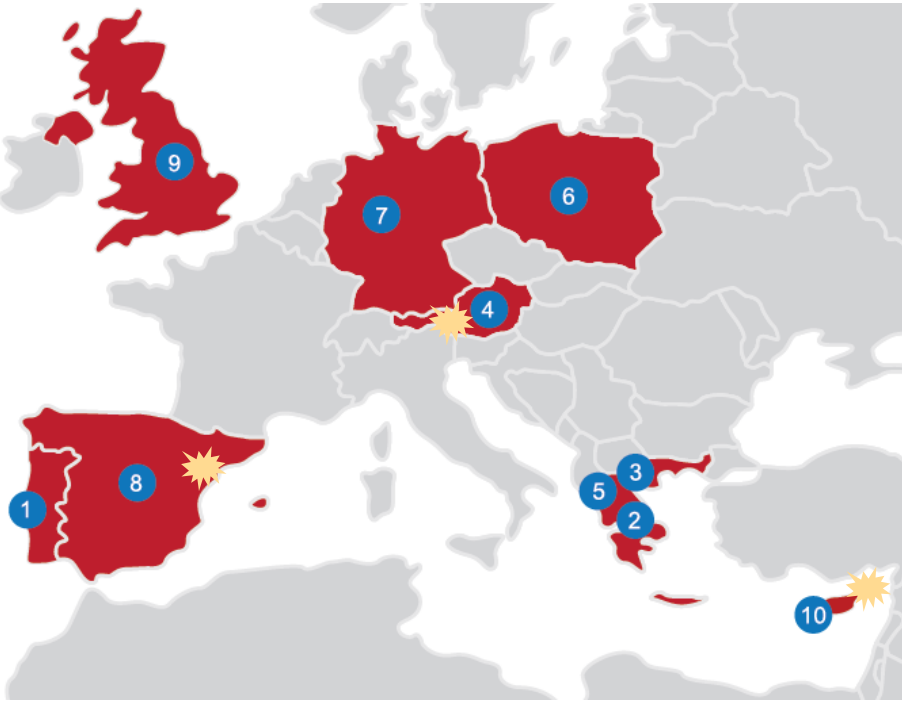

Name	R&D legal statuses	Country
Instituto Politécnico de Setúbal - IPS	Higher education	Portugal
Centre For Renewable Energy Sources and Saving Fondation - CRES	Research organisation	Greece
Technologiko Ekpedeftiko Idrima Stereas Elladas - TEISTE	Higher education	Greece
Geoteam Technisches Buro Fur Hydrogeologie, Geothermie Und Umwelt Gmbh - GEOTEAM	SME	Austria
Panepistimio Ioanninon - UOI	Higher education	Greece
Szkola Glowna Gospodarstwa Wiejskiego - SGGW	Higher education	Poland
Ruhr-Universitat Bochum - RUB	Higher education	Germany
Asociacion Ecoserveis - ECOSERVEIS	Non-profit org.	Spain
Phase Change Material Products Ltd – PCM Produc	SME	U.K.
Z & X Mechanical Installations Limited – Z&X	SME	Cyprus

Work Plan

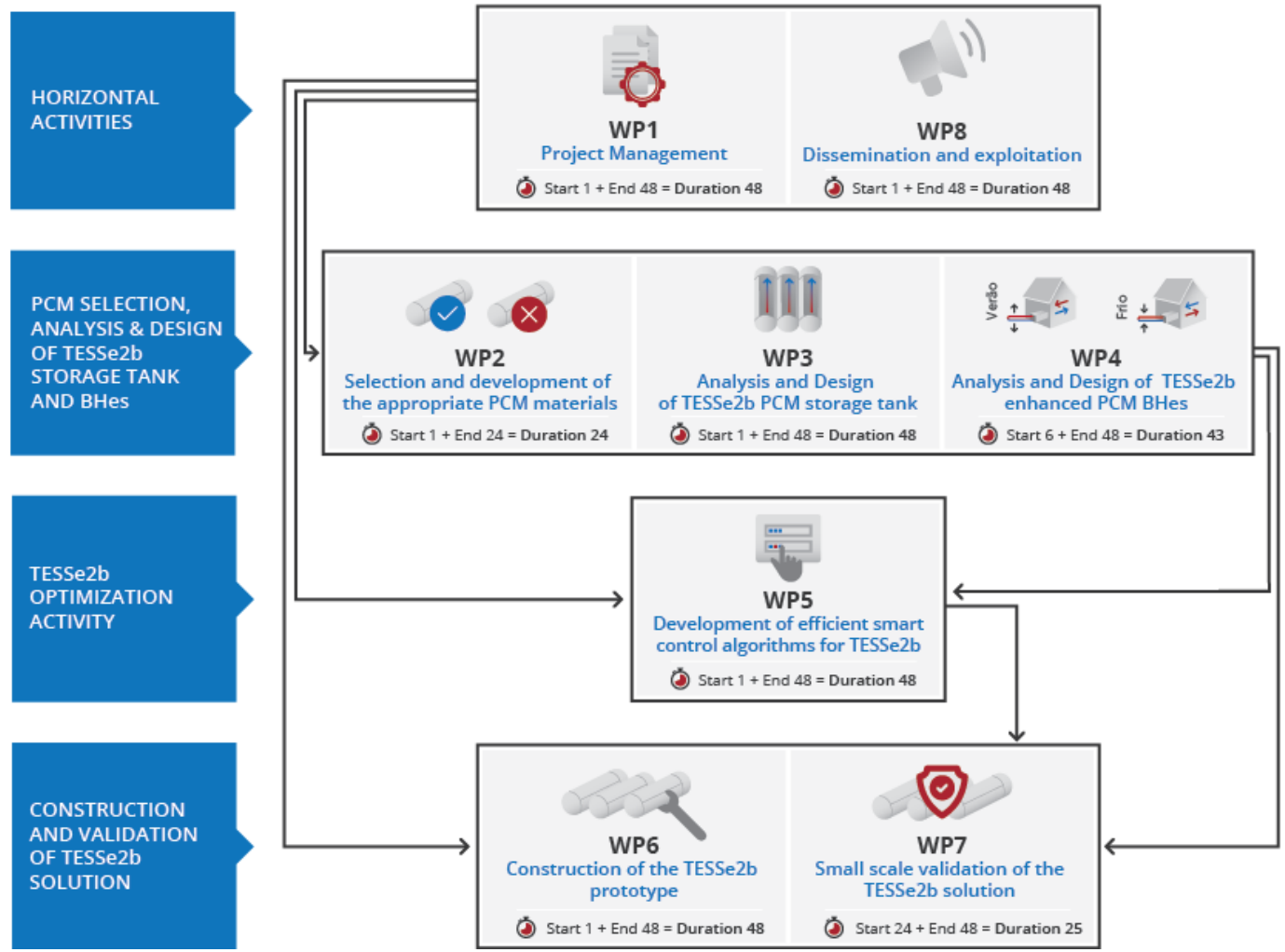

Total: 8 Workpackages

Management: One

Dissemination

Communication: One

Technical: Seven

Workpackage WP2 - Selection and development of the appropriate PCM materials for TESSe2b [Months: 1-24]

TASK 2.1: Development of a **nano-enhanced paraffin PCM** for TESSe2b hot/cold thermal storage tank **(UOI)**

Contributors: UOI, PCM Products, IPS, TEISTE, RUB

TASK 2.2: Selection of the appropriate **salt-hydrate PCM** for TESSe2b hot/cold thermal storage tank **(PCM Products)**

Contributors: PCM Products, IPS, TEISTE, SGGW

TASK 2.3: Selection of appropriate **encapsulated organic PCM for the BHEs** **(PCM Products)**

Contributors: PCM Products, IPS, GEOTEAM, CRES

TASK 2.4: **Thermal characterisation** and benchmarking of the candidate TESSe2b PCMs **(PCM Products)**

Contributors: PCM Products, TEISTE, UOI

Characterisation of the latent heat for each PCM

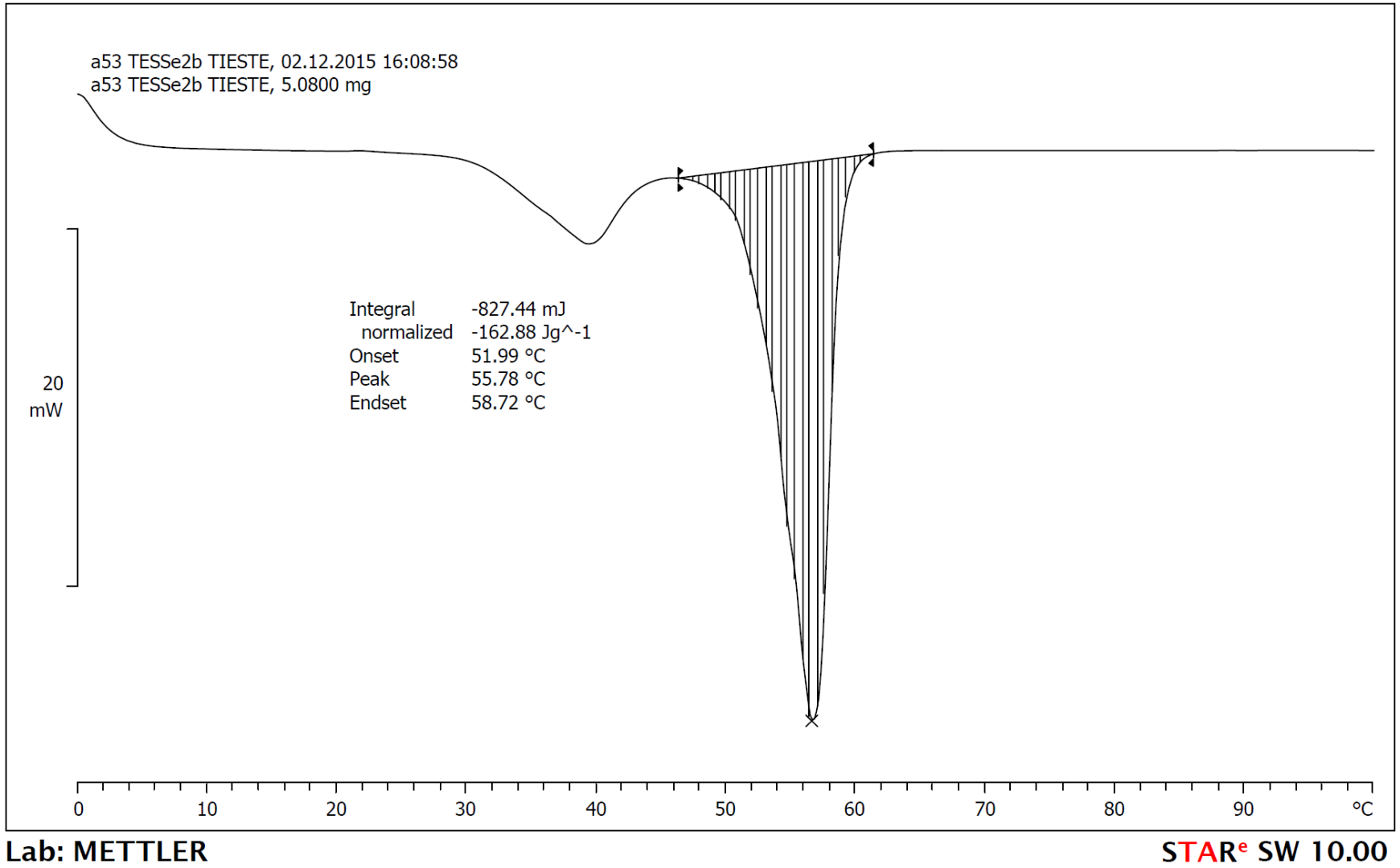

Characterisation of the latent heat for each PCM

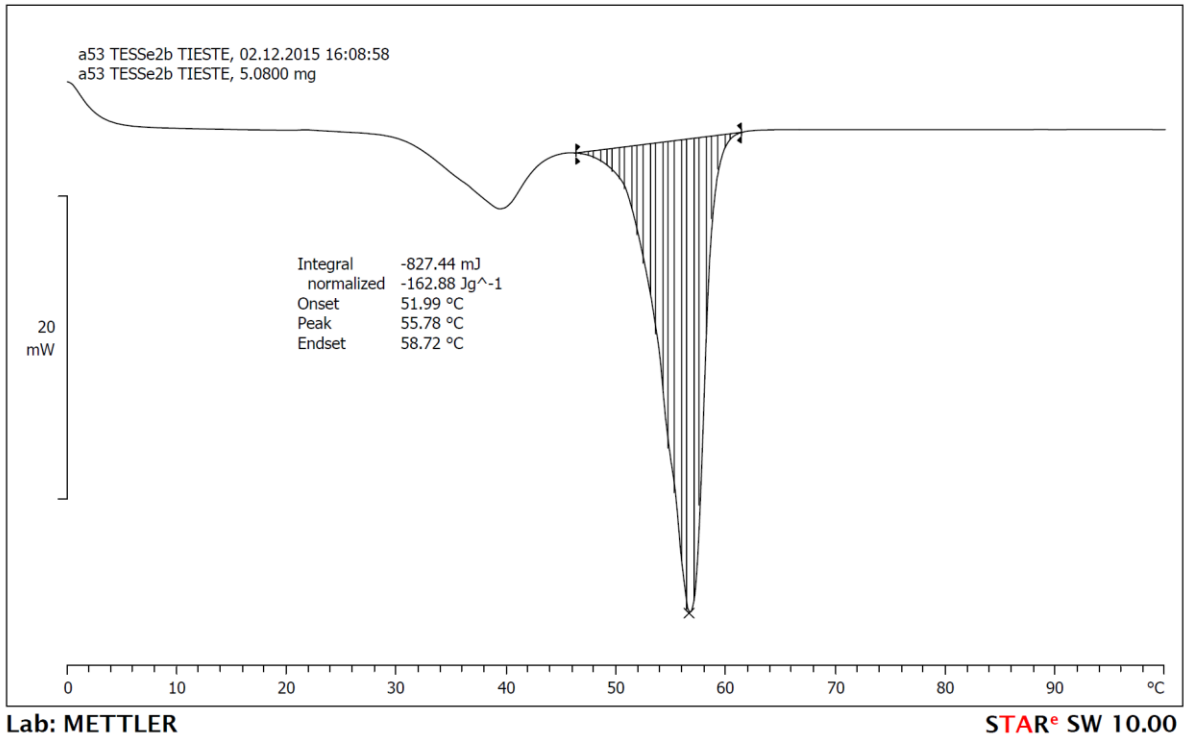

Without NPs

With NPs

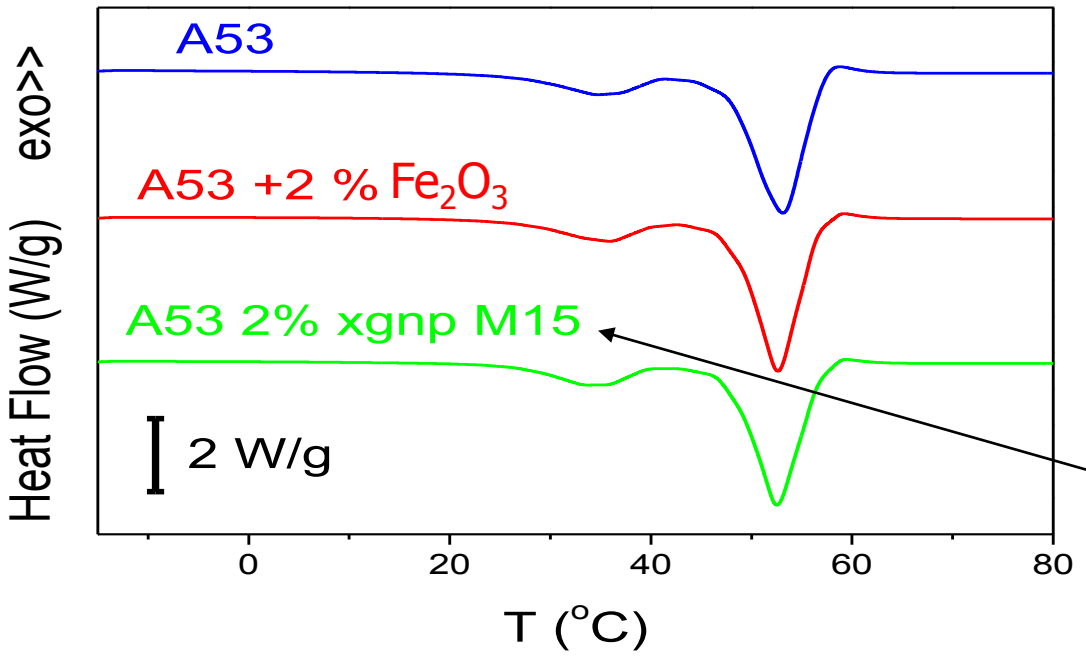

xGnPs ultrathin particles of graphite or short stacks of graphene sheets

Thermal Conductivity

Nano-enhancement of paraffin PCM

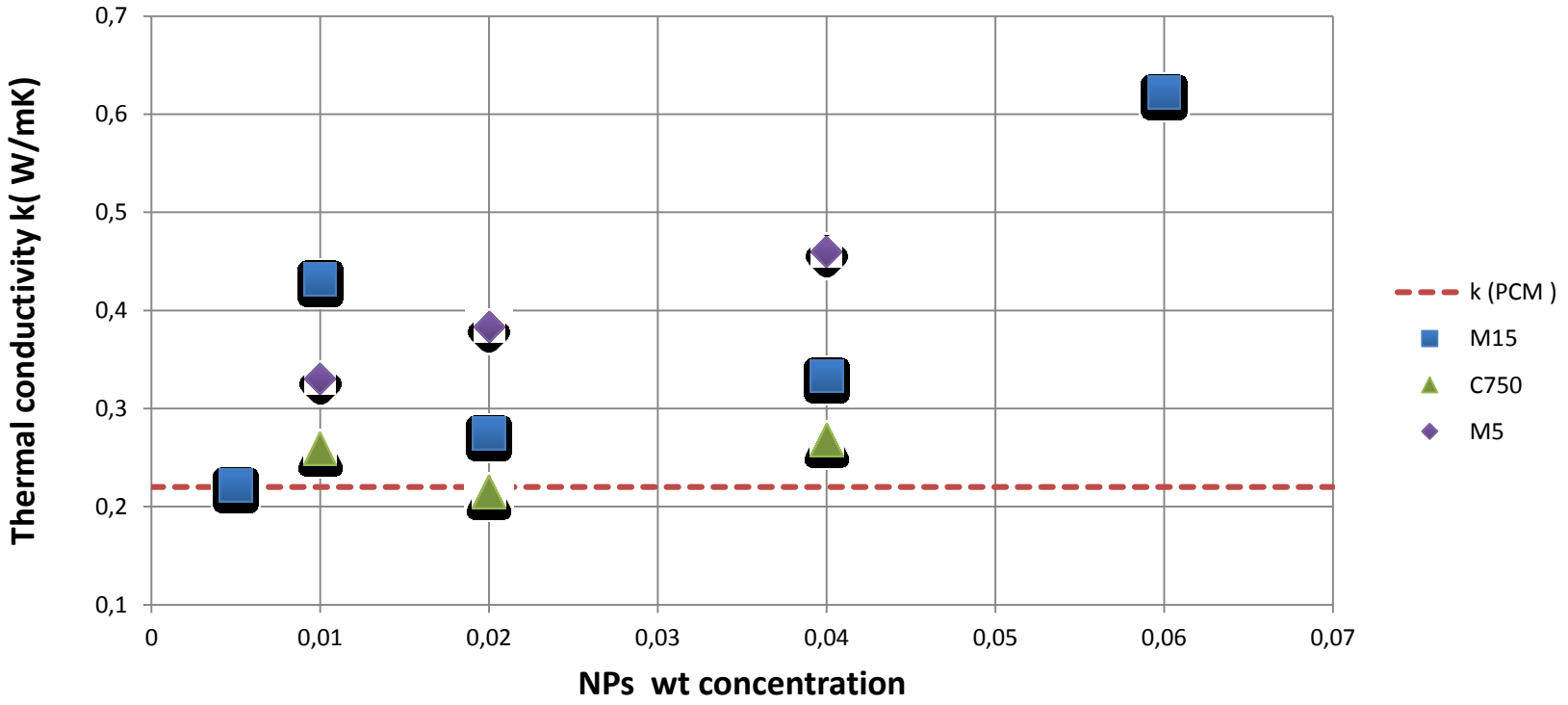

PCM

PlusICE PCM (HYDRATED SALT) (S) RANGE

PCM Type	Phase Change Temperature (°C)	(°F)	Density (kg/m3)	(lb / ft3)	Latent Heat Capacity (kJ/kg)	(Btu / lb)	Volumetric Heat Capacity (MJ/m3)	(Btu / ft3)	Specific Heat Capacity (kJ/kg K)	(Btu / lb °F)	Thermal Conductivity (W/m K)	(Btu / ft2h°F)	Max Operating Temp (°C)	Max Operating Temp (°F)
HYDRATED SALT BASED PCM SOLUTIONS														
HOT CIRCUIT														
S58	58	136	1,505	94.0	145	62	218	5,857	2.55	0.604	0.690	0.399	120	248
S50	50	122	1,601	99.9	100	43	160	4,297	1.59	0.377	0.430	0.249	120	248
S46	46	115	1,587	99.1	210	90	333	8,945	2.41	0.571	0.450	0.260	56	133
S44	44	111	1,584	98.9	100	43	158	4,251	1.61	0.381	0.430	0.249	120	248
COLD CIRCUIT														
S15	15	59	1,510	94.3	160	69	242	6,485	1.90	0.450	0.430	0.249	60	140
S13	13	55	1,515	94.6	160	69	242	6,506	1.90	0.450	0.430	0.249	60	140
S10	10	50	1,470	91.8	155	67	228	6,115	1.90	0.450	0.430	0.249	60	140
S8	8	46	1,475	92.1	150	65	221	5,938	1.90	0.450	0.440	0.254	60	140
S7	7	45	1,700	106.1	150	65	255	6,844	1.85	0.438	0.400	0.231	60	140

(Macro) Encapsulated organic PCM for the BHEs

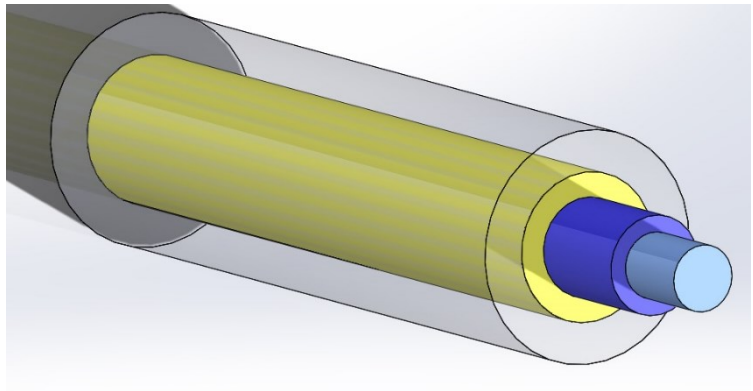

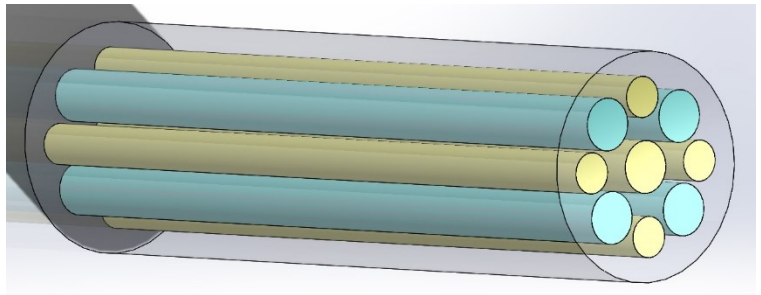

CFD Simulations (Ansys/Fluent)

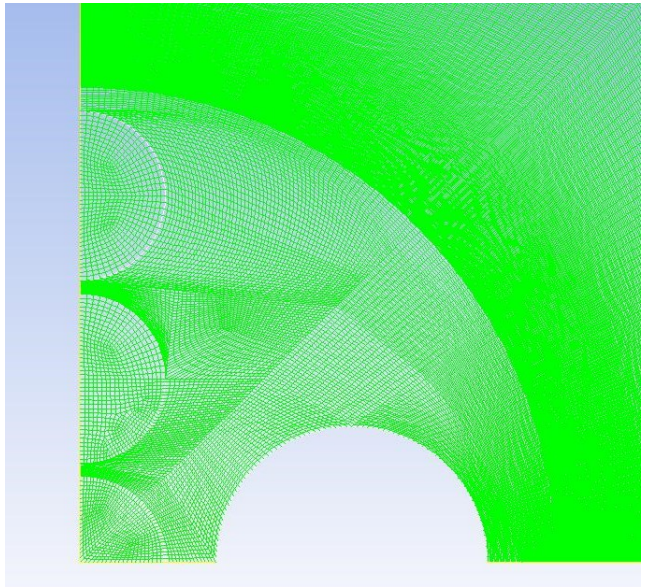

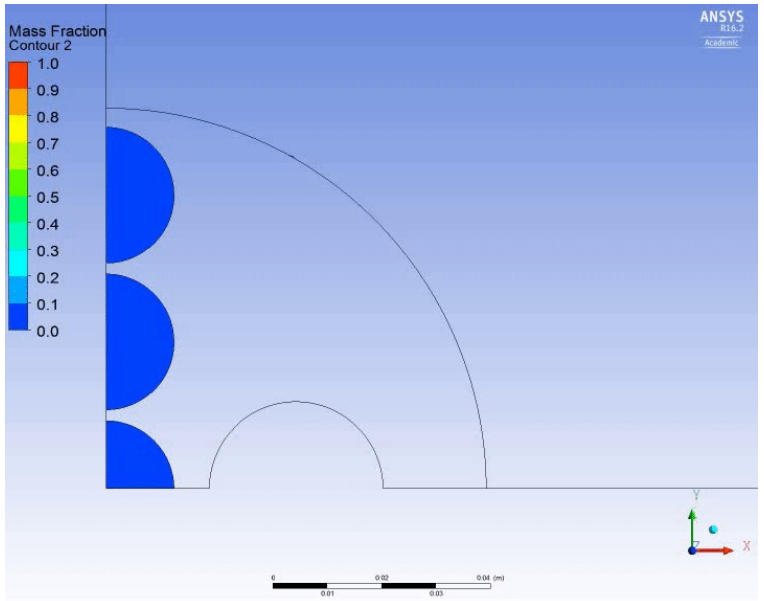

Encapsulated organic PCM for the BHEs

Micro encapsulation (MEPCM)

PCM in Powder + Grout material

DSC Analysis Results:

Austria: A9 &
A9 powder sample (MEPCM)

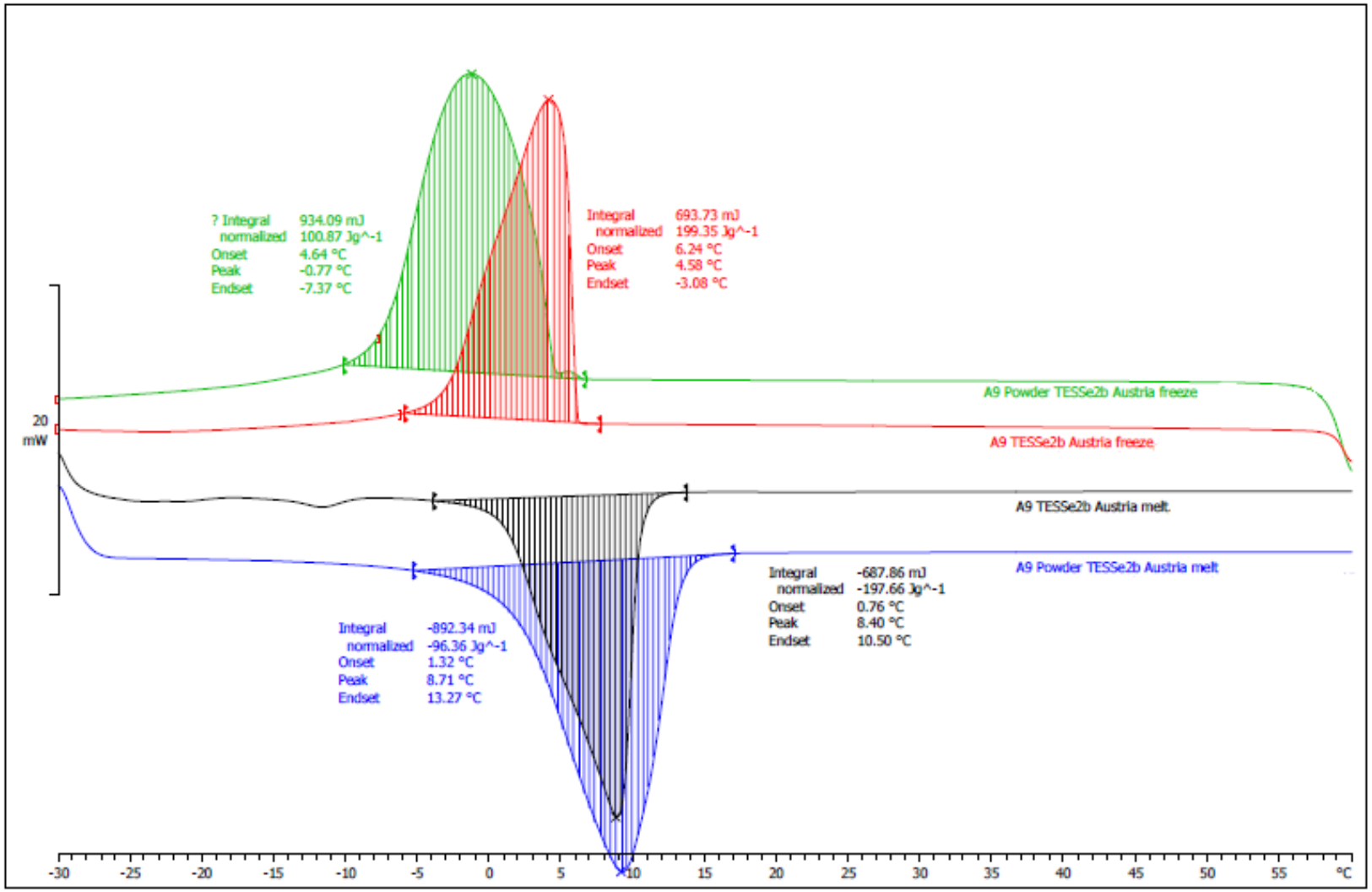

Workpackage WP3 - Analysis and Design of TESSe2b PCM storage tank [Months: 1-42]

- TASK 3.1: Modular **design of thermal storage containe**r for candidate PCMs **(TEISTE)**

  Contributors: IPS, SGGW

- TASK 3.2: **Design and optimization of integrated HEs** for PCM storage tanks. **(TEISTE)**

  Contributors: IPS, SGGW, CRES

- TASK 3.3: Development of **HE's thin film protective coating**. **(UOI)**

  Contributors: PCM PRODUCTS

- TASK 3.4: **Report the technical characteristics** of TESSe2b PCM storage tank. **(TEISTE)**

  Contributors: IPS, CRES, UOI, SGGW, RUB, PCM PRODUCTS

Three proposals for the tank material

(Main problem: Compatibility between PCMs and Thermal Plastics)

Why?	HDPE	PP-H	GRPs
Long term operational temperature upper limit	~55ºC Acceptable with careful controlling	~90ºC Acceptable	~100ºC Acceptable
Compatibility with salt hydrates	Ok	Ok	Ok
Compatibility Paraffins	Under investigation Undergoing experimental study according ISO 175:1999	Under investigation Undergoing experimental study according ISO 175:1999	Ok

- Immersing HDPE and PP-H samples inside organic PCM (ISO 175:1999)

70 ºC

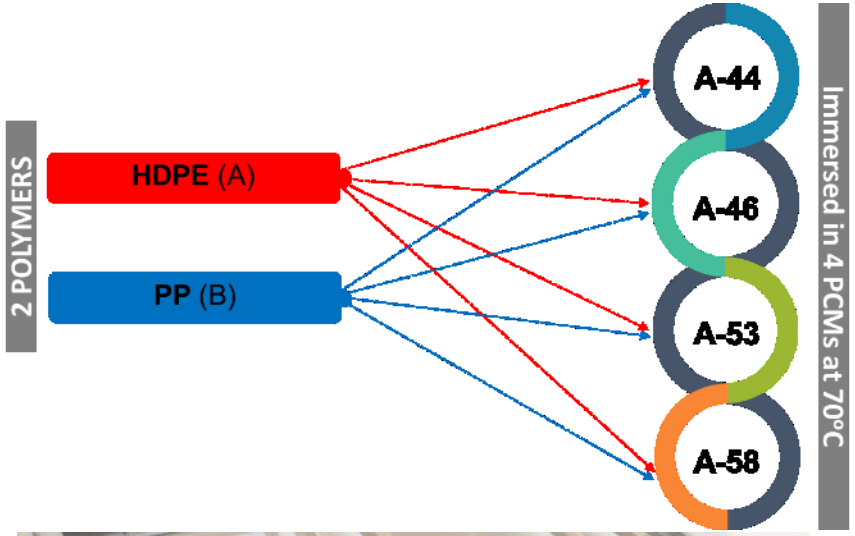

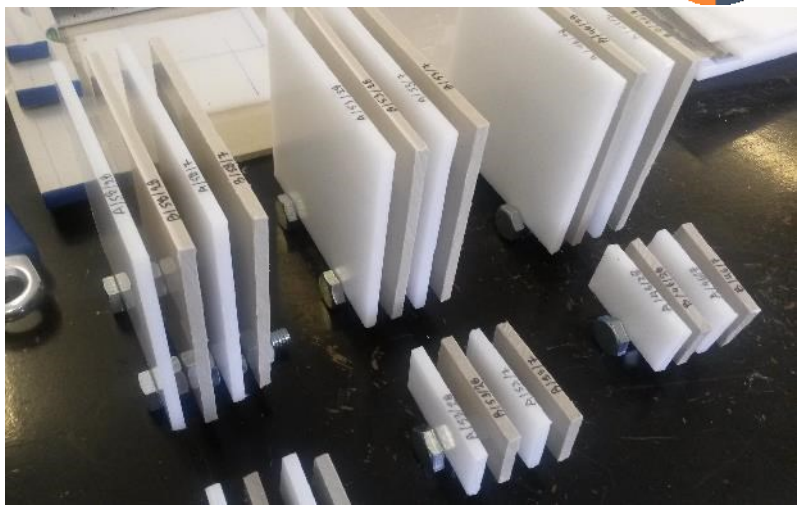

The tank design: EN12573 excel sheet and the Finite Elements Analysis (FEA) simulation

The tank design (side plate thickness and dimensions of the reinforcing bars) was designed in accordance to standard EN 12573-3: 2000

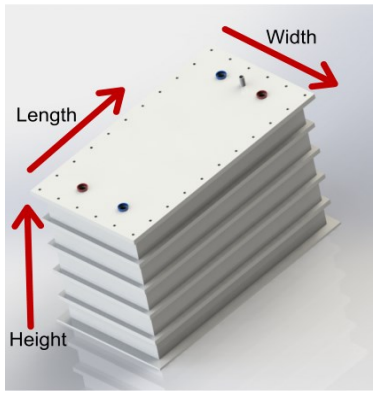

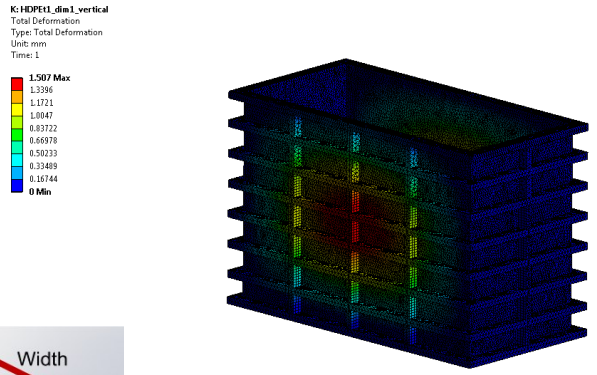

Case 1

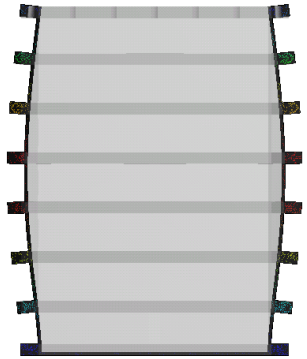

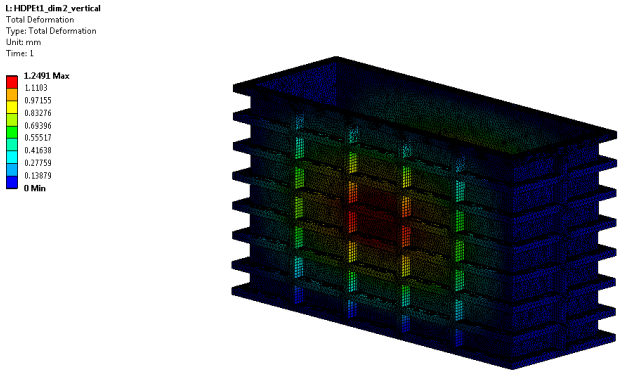

Case 2

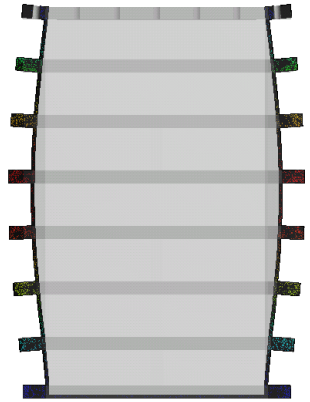

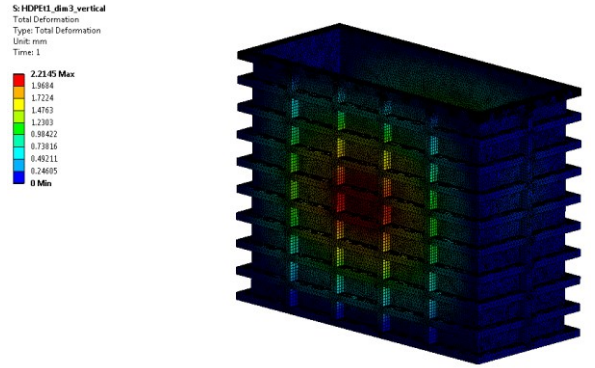

Case 3

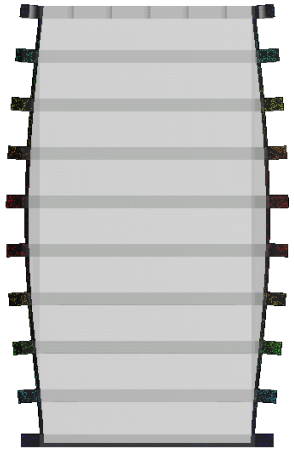

Design and optimization of integrated HEs for PCM storage tanks

Experimental work

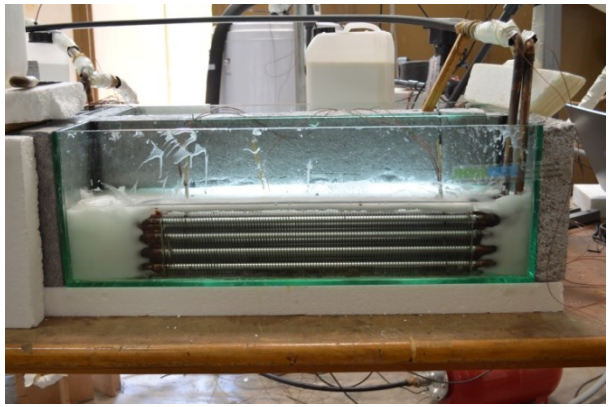

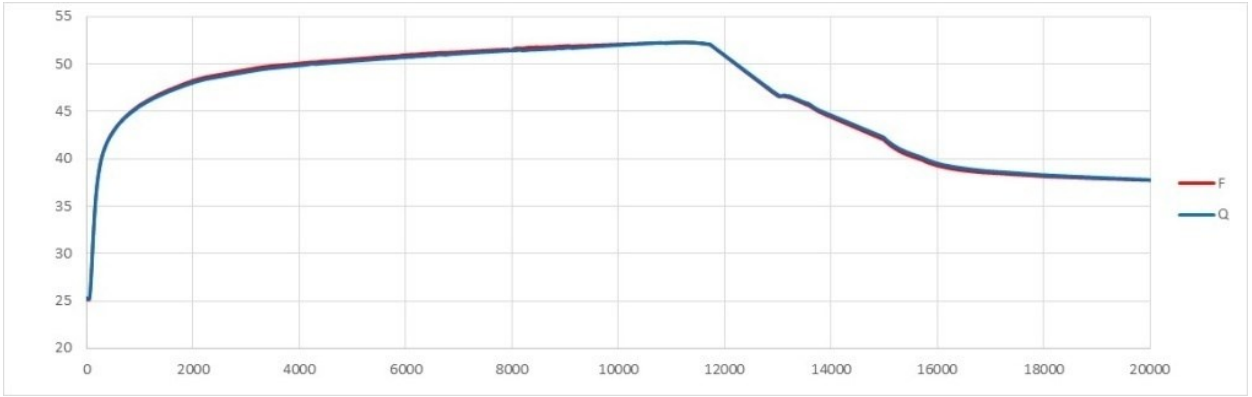

Computational Fluid Dynamics (CFD) simulation, Ansys/Fluent

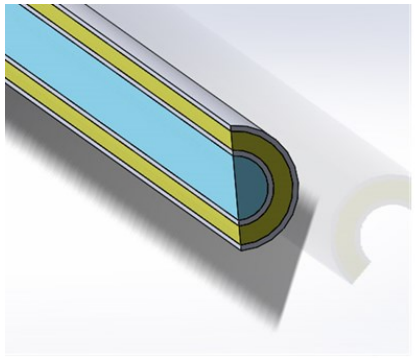

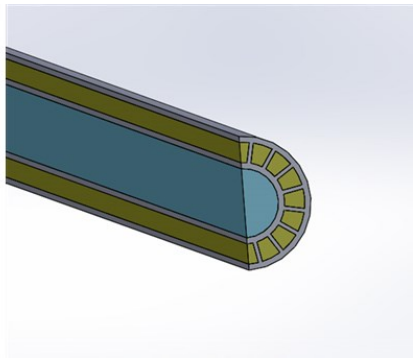

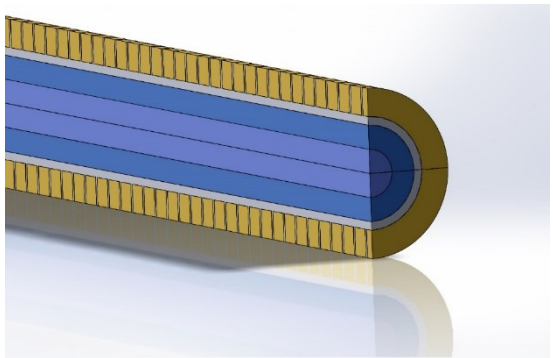

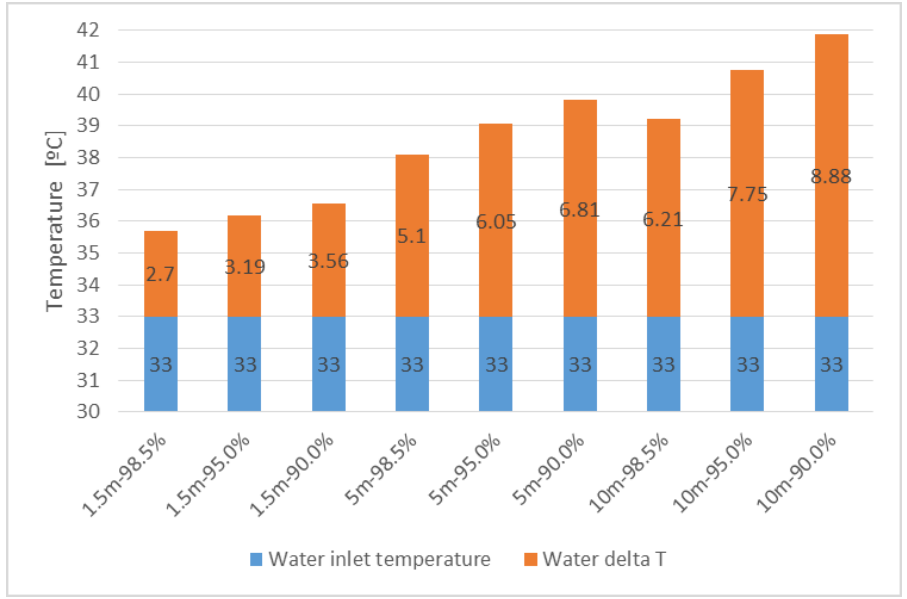

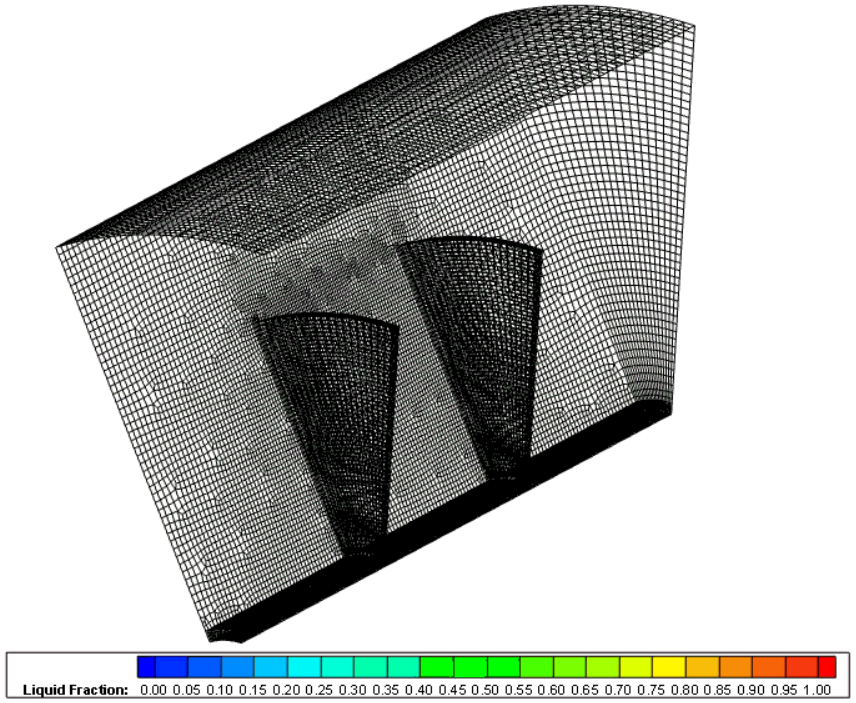

3D time evolution of melting

- **Workpackage WP4 - Analysis and Design of TESSe2b enhanced PCM BHEs** [Months: 6-48]

- TASK 4.1: Analysis and Design of the **BHE's grout backfilling** **(GEOTEAM)**

  Contributors: IPS, TEISTE, RUB, ECOSERVEIS, PCM PRODUCTS, Z & X
  Duration: M 06 – M 24

- TASK 4.2: **Optimization of the BHE** - Design by macro-scale numerical simulation **(GEOTEAM)**

  Contributors: IPS, CRES, TEISTE, UOI, SGGW, PCM PRODUCTS
  Duration: M 20 – M 42

- TASK 4.3: **Report the technical characteristics** of enhanced PCM BHEs **(GEOTEAM)**

  Contributors: IPS, CRES, TEISTE
  Duration: M 36 – M 42

Optimization of the PCM in the BHE

(Computational Fluid Dynamics simulation, Ansys/Fluent)

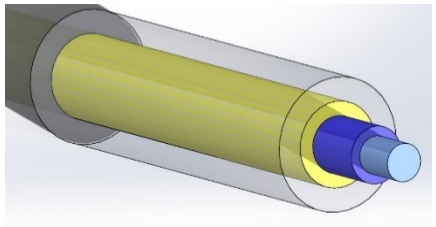

Liquid mass fraction vs Time

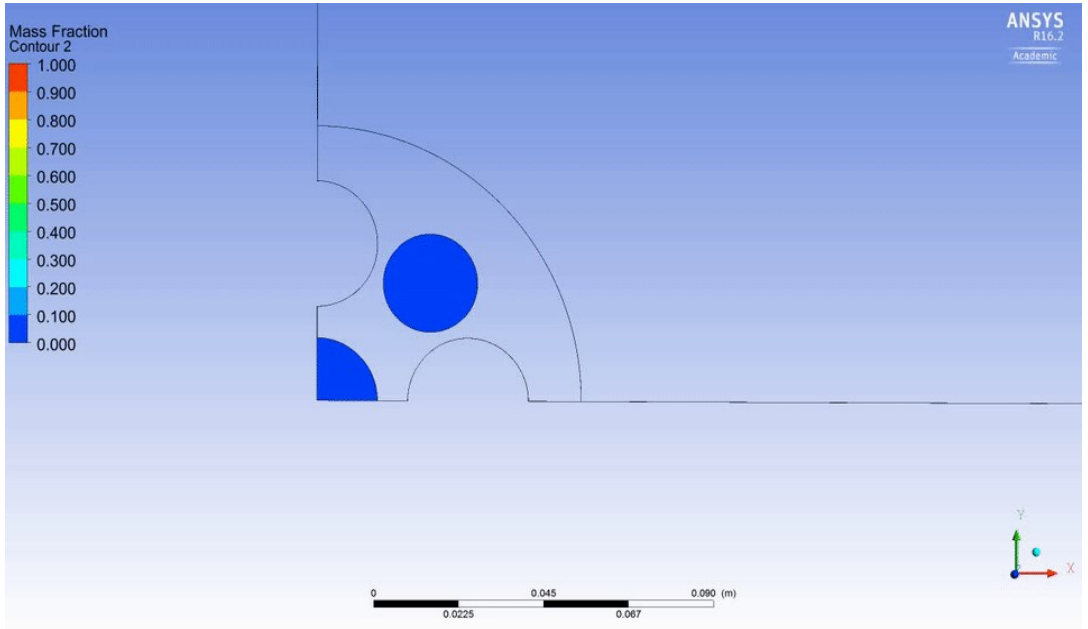

Temperature vs Time

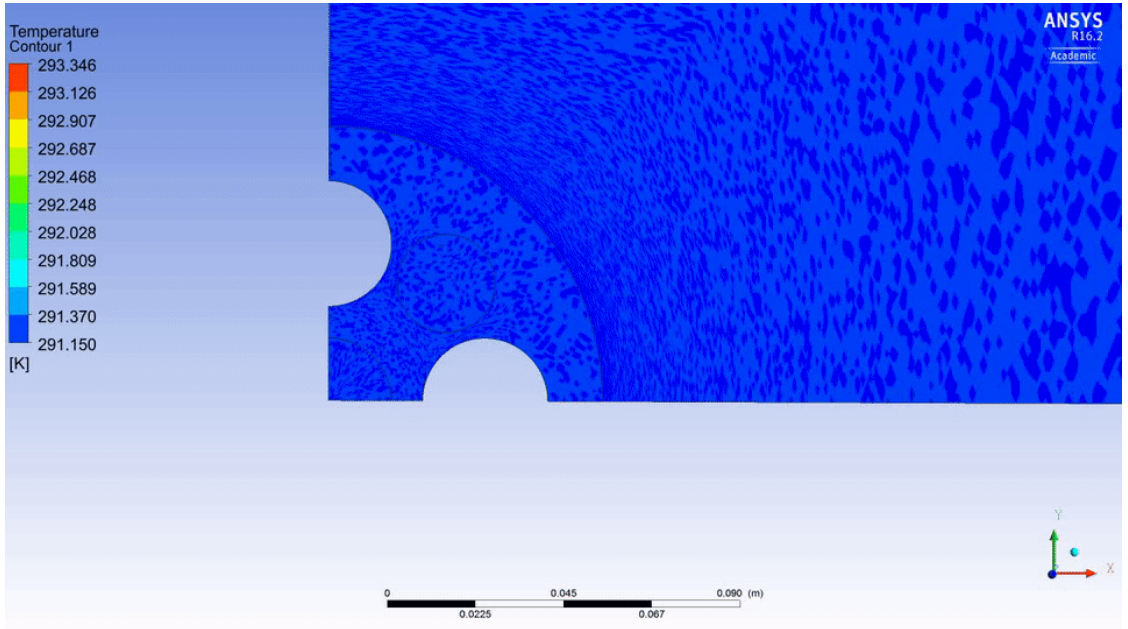

Numerical Simulations (FEFLOW, finite-element method)

Study of the interaction between BHE and Soil along the time (e.g. 25 years)

Components of a BHE/model:

1. Soil
2. Borehole
3. BHE tubes
4. Grout
5. PCM
6. Heat carrier fluid

→ Mesh (in 3d)

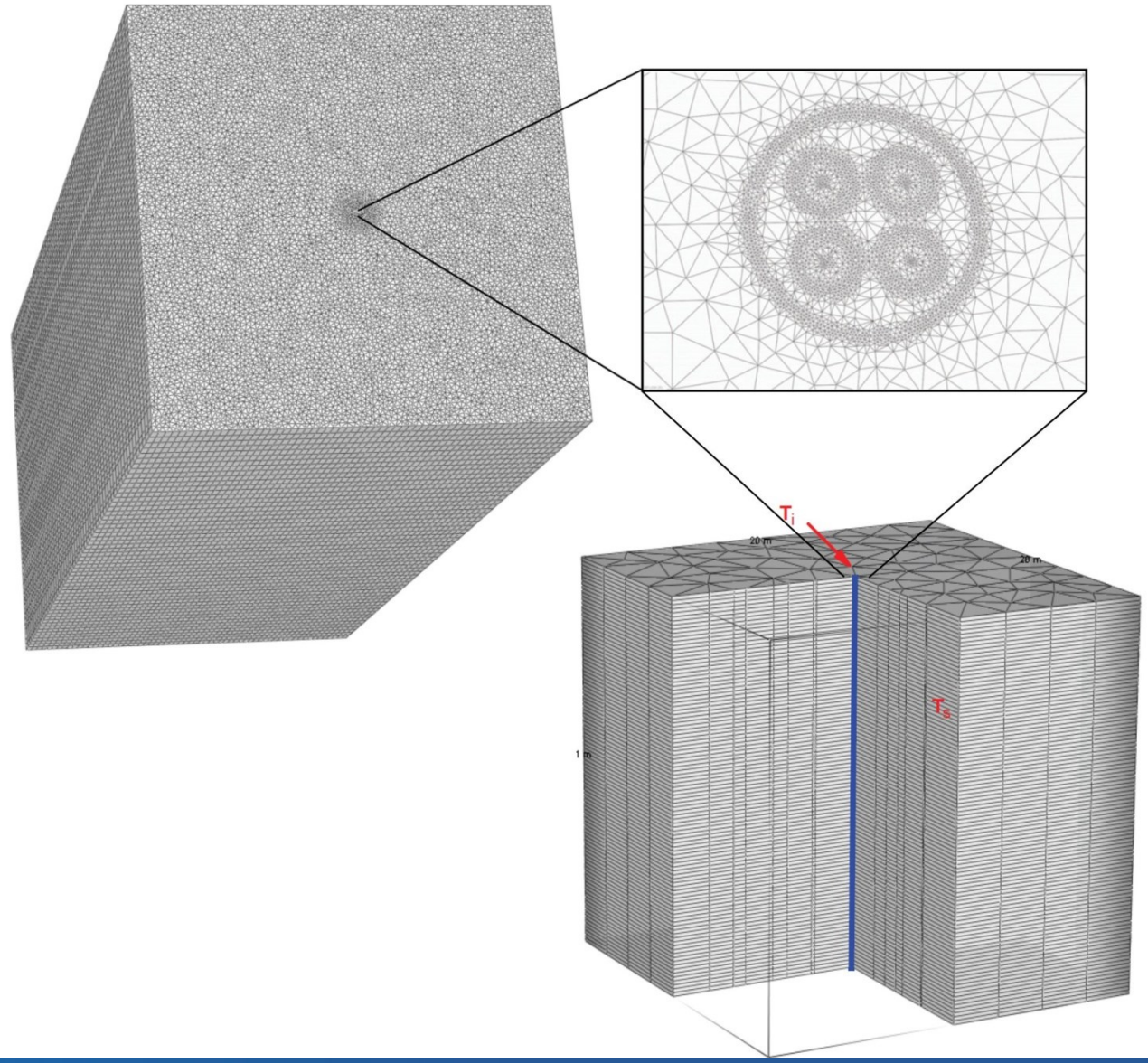

Workpackage WP5 - Development of efficient smart control algorithms for TESSe2b [Months: 1-48]

Task 5.1: Analysis for the **appropriate sensors, logical units and actuators**

- **Task leader: SGGW**
- **Contributors: RUB**

Task 5.2: Development of a **database** with **usage profiles** and **technical data** for TESSe2b components

- **Task leader: SGGW**
- **Contributors: RUB, IPS, PCM PRODUCTS**

Task 5.3: Development of a **control algorithm** implemented in **Building Energy Management** (BME) system

- **Task leader: RUB**
- **Contributors: SGGW**

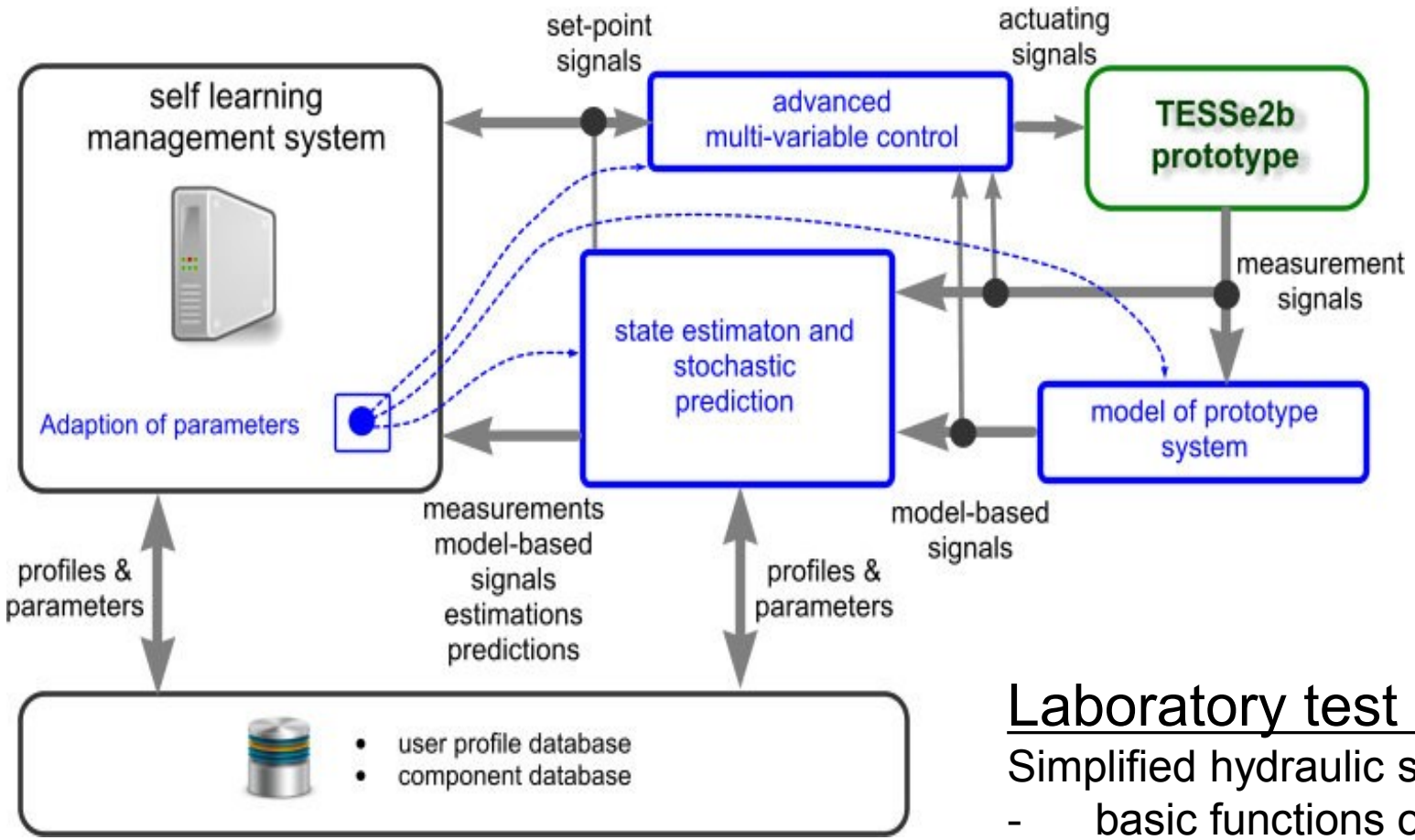

Laboratory test benchs (RUB and SGGW)

Simplified hydraulic scheme is being built at RUB to test

- basic functions of control hardware and software
- performance of the hot PCM Tank with preliminary heat exchanger and paraffin (A44)

Workpackage WP7 - Small scale validation of the TESSe2b solution [Months: 24-48]

TASK 7.1: Small scale validation of TESSe2b solution in **Austria** (**GEOTEAM**)

Contributors: IPS, CRES, TEISTE, SGGW, RUB, ECOSERVEIS, Z&X, PCM PRODUC

TASK 7.2: Small scale validation of TESSe2b solution in **Cyprus (Z&X)**

Contributors: IPS, CRES, TEISTE, SGGW, RUB, ECOSERVEIS, Z&X, PCM PRODUC

TASK 7.3: Small scale validation of TESSe2b solution in **Spain (ECOSERVEIS)**

Contributors: IPS, CRES, TEISTE, SGGW, RUB, ECOSERVEIS, Z&X, PCM PRODUC

Austria (Graz)

- Within the grounds of a technical school.
- Utilisation: accommodation of the janitor and his family.
- Dwelling Area: 202 m²

Cyprus (Meliou village)

- Private house.
- Dwelling Area: 180 m²

Spain (Calonge de Segarra, Barcelona)

- Municipality house.
- Dwelling Area: 150 m²

Building Energy Simulation using Design Builder

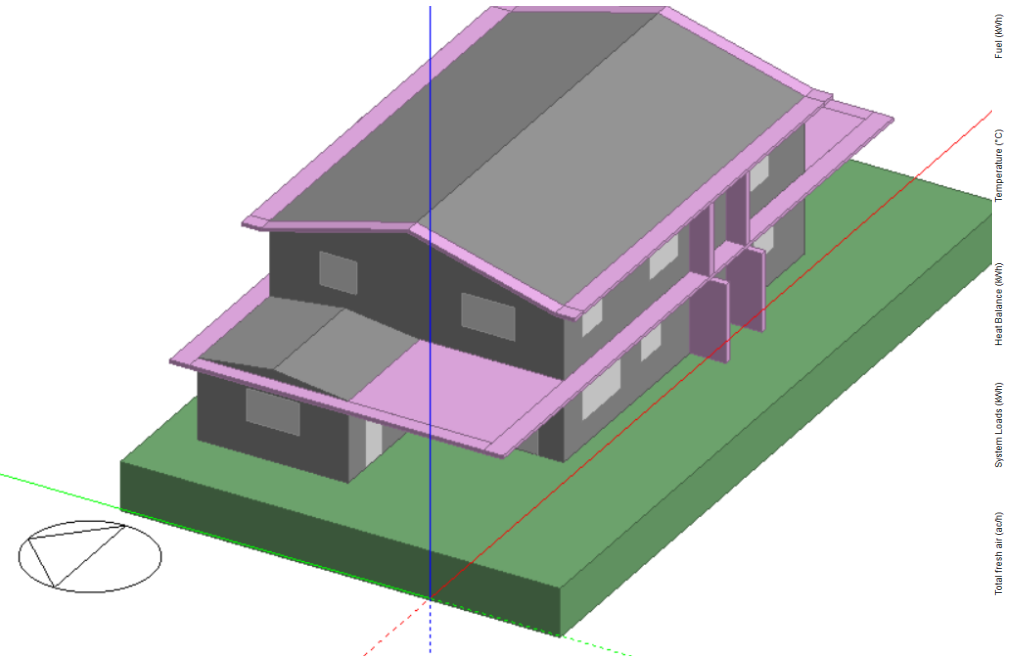

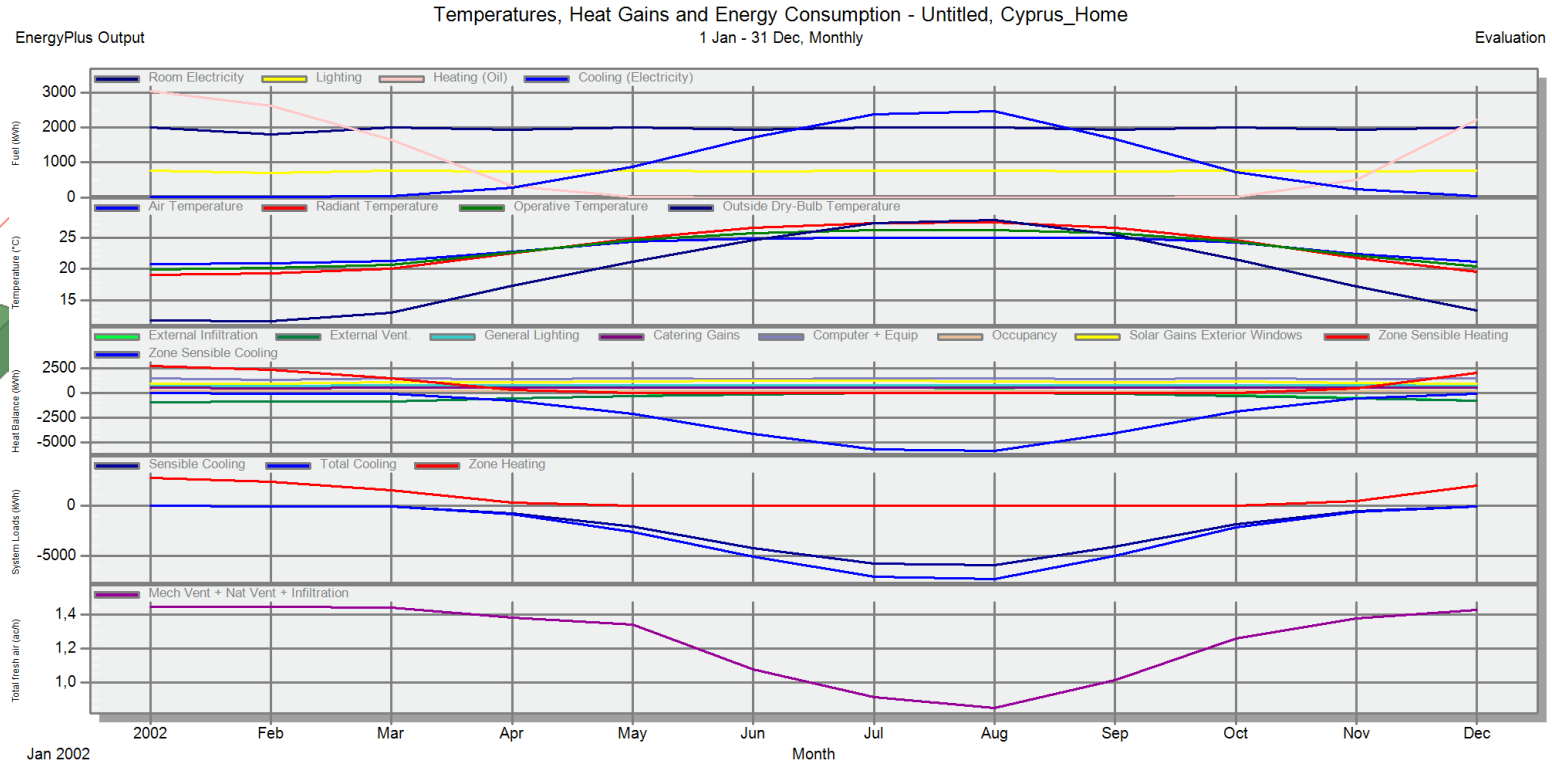

Website and Project Video

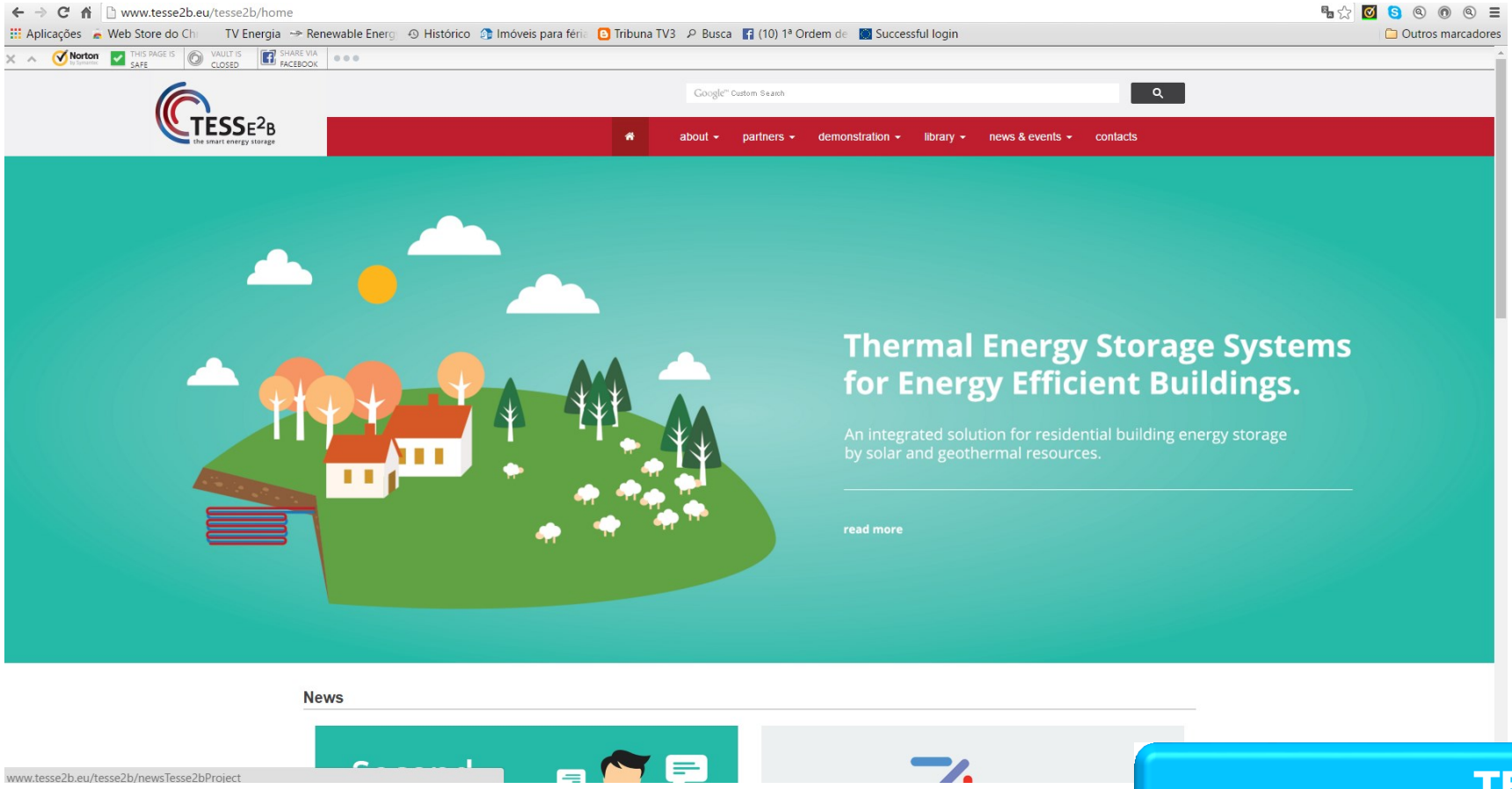

www.tesse2b.eu

[TEESe2b Video (www.youtube.com/watch?v=Otyn0PntoGg)](http://www.youtube.com/watch?v=Otyn0PntoGg)

TESSe2b Survey

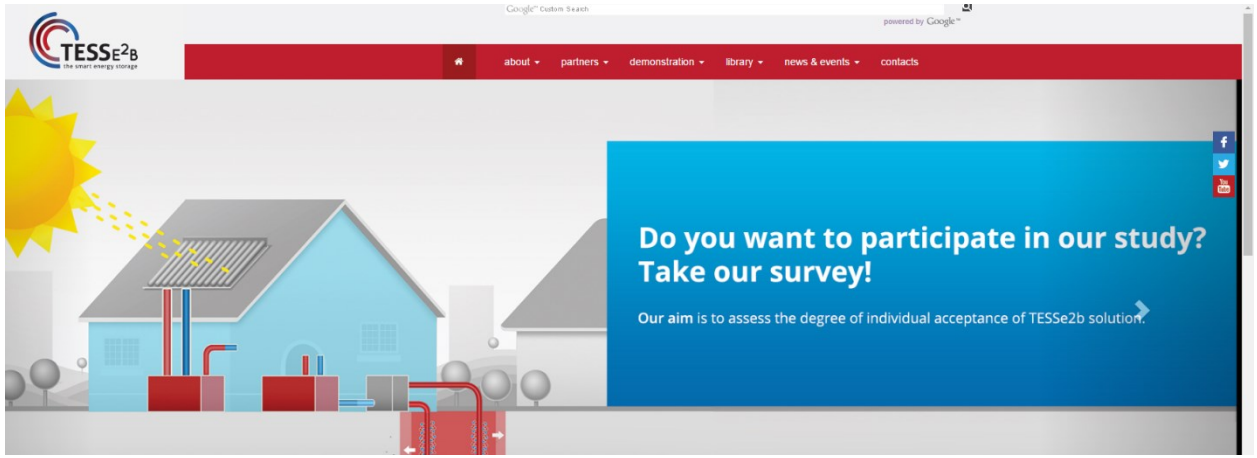

TESSe2b website (www.tesse2b.eu/tesse2b/onlineSurvey

Inquiry (Portuguese Version) (https://survey.ips.pt/index.php/257459?newtest=Y)

Your answers to the survey are **very important** for the project.

I ask the favor to all of you to spend a few minutes answering to the survey.

Thank you for your help.

Outro projeto aprovado na mesma *call*:

CREATE PROJECT

The main aim of CREATE is to develop and demonstrate a heat battery, i.e. an advanced thermal storage system based on Thermo-Chemical Materials (TCMs), that enables economically affordable, compact and loss-free storage of heat in existing buildings.

The heart of the system consists of a vessel that contains a salt that is hydrated and dehydrated, which generates an energy effect. In the time between de-hydration and hydration the energy is stored in the salt.

www.createproject.eu

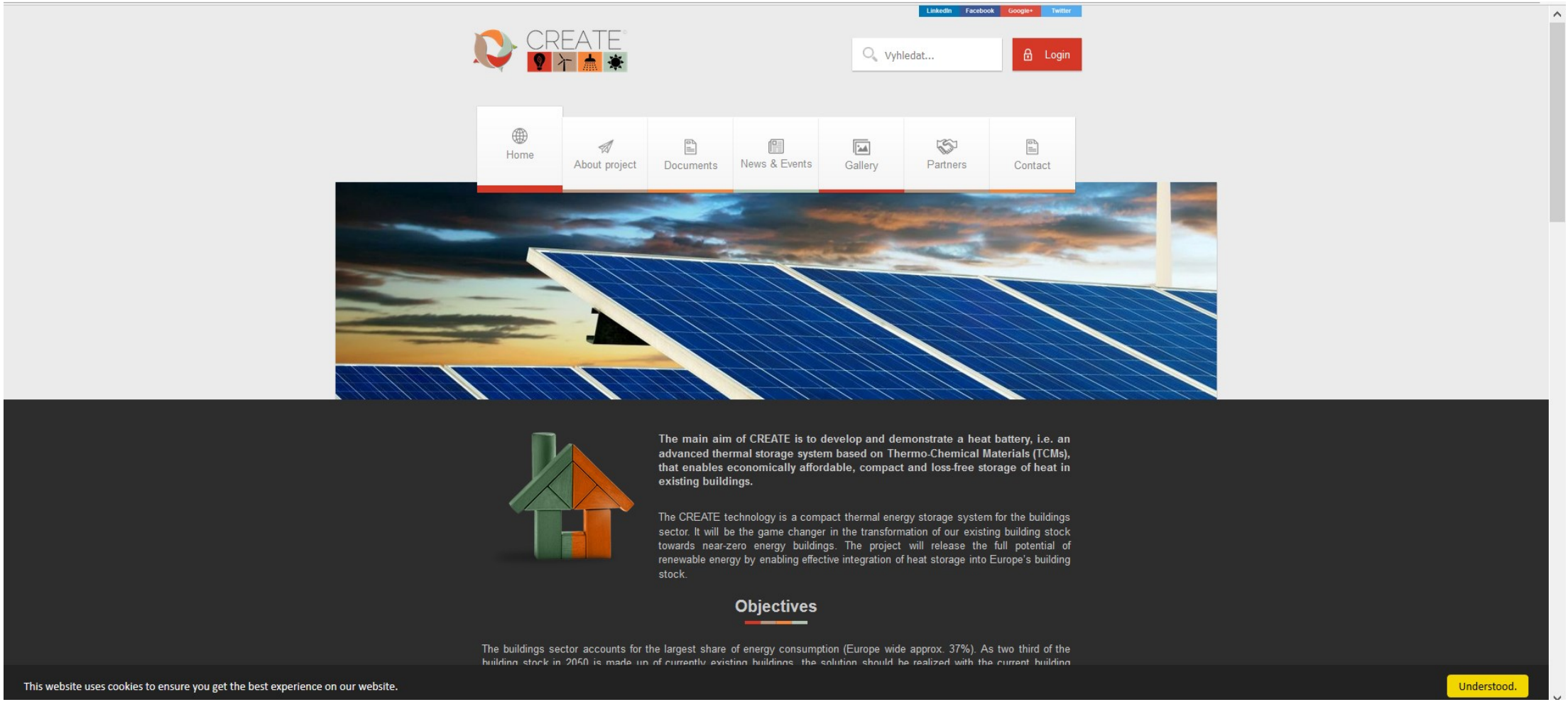

Conclusões

- A geotermia é uma solução de eficiência energética importante, mas a sua implementação deverá ser cuidadosamente estudada.

- Existem novos desenvolvimentos tecnológicos que permitirão tirar cada vez mais partido desta fonte de energia.

- Existem desenvolvimentos de novos materiais e novas tecnologias que permitirão aumentar as possibilidades de utilização do armazenamento térmico a diferentes temperaturas.

Conclusões

- A Comissão Europeia tem se mostrado muito interessada na promoção do desenvolvimento tecnológico da geotermia e do armazenamento de energia térmica, através de financiamento de projetos I&D.

- A conjugação destas duas tecnologias permitirá alcançar níveis de eficiência energética importantes na climatização dos edifícios.

- O projeto TESSe2b é um exemplo do esforço que está a ser feito para desenvolver o armazenamento térmico ligado a fontes de energia geotérmica e solar térmica.

TESSe2b
the smart energy storage

Thank for your attention

Thermal Energy Storage Systems

for energy efficient building an integrated solution for residential building energy storage by solar and geothermal resources

European Commission